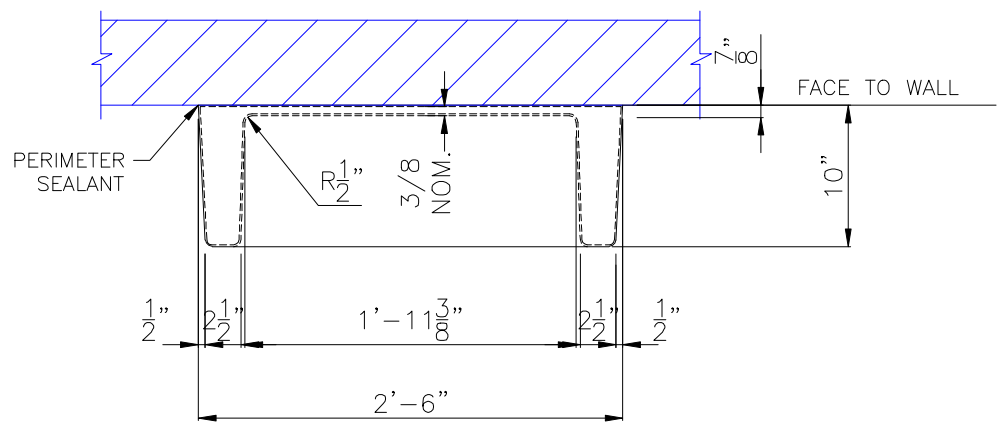

TOP VIEW

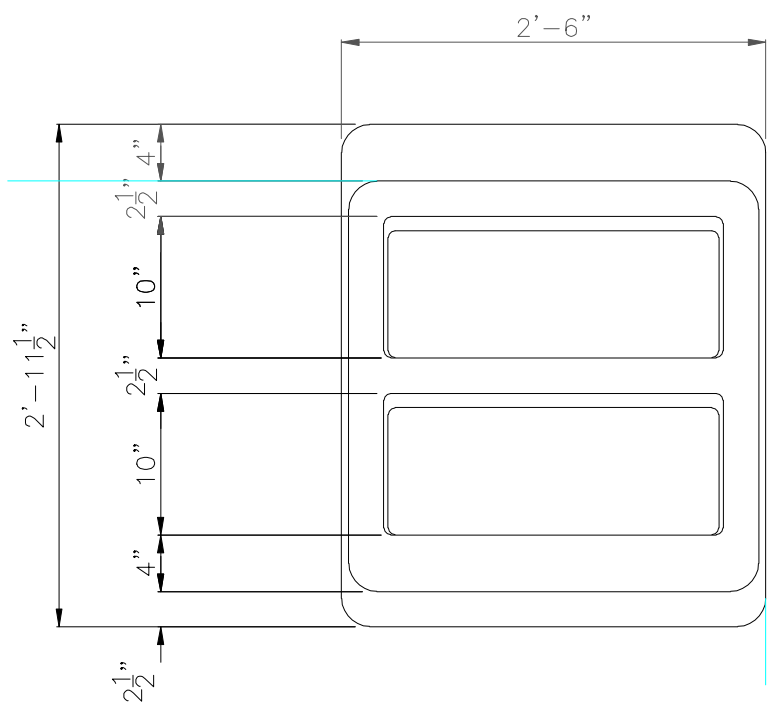

FRONT ELEVATION

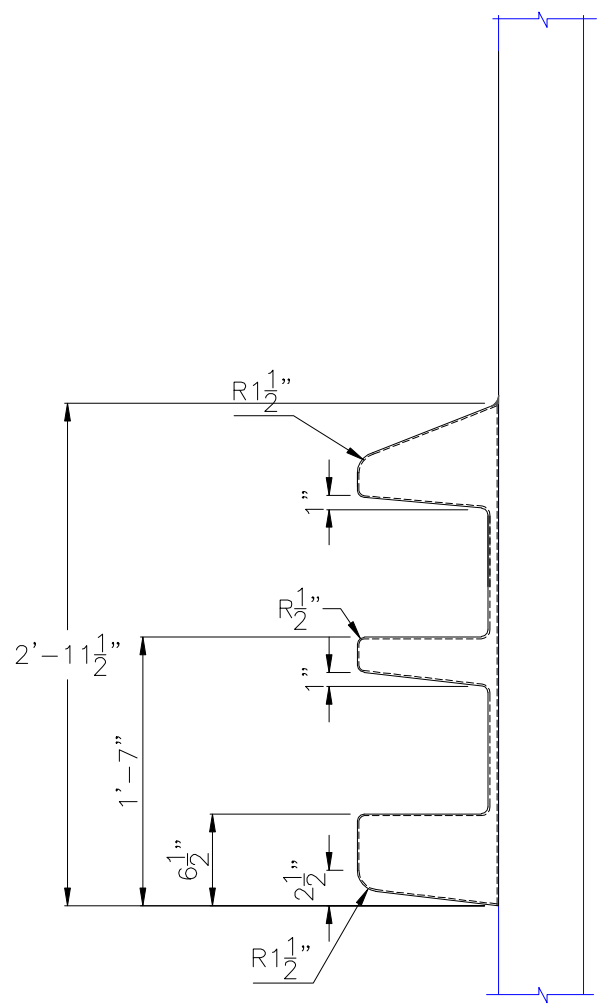

SIDE ELEVATION

ISOMETRIC VIEW

MAX SECURE™
Detention Products

© 2008 MAX SECURE SYSTEM INC.
CONFIDENTIAL AND PROPRIETARY DOCUMENT
ANY ONE OR MORE OF THE FOLLOWING
PATENTS MAY APPLY
U.S PATENT NO. 5,303,669 5,775,835
6,449,790 AND 6,895,622 B2
C.D.N. PATENT NO. 2,032,532 2,070,984
US PATENTS PENDING.
© KENNETH E. SZEKELY

MATERIAL LIST

ITEM	DESCRIPTION	PART NO.	QT'Y
1			
2			
3			
4			
5			
6			
7			

REFERENCE DRAWINGS

DWG. NO.	DESCRIPTION

No.	DATE	REVISION	APPR.

SCALE N.T.S

DESIGNED BY	K.S.	DATE	
DRAWN BY	A.M	DATE	07/25/07
CHECKED BY	J.D	DATE	07/25/07
PROJECT MANAGER			
TRADE		PART NO.	5000-7
MATERIAL	HERCULITE POLYMER COMPOSITE		

SUBJECT
MAX SECURE™
MAINTENANCE FREE
INSTITUTIONAL FURNITURE

PROJECT

TWO SHELF LOCKER
PART NO. 5000-7
PLAN AND ELEVATIONS

DRAWING NO.	SHT. NO.	REV. NO.
5000-7	01	0